Real World Case Study 1: The Millennium

We can all fondly look back to 1999 and remember the excitement surrounding the "historical" moment when the clock struck twelve midnight, bringing us into

the year 2000. The months leading into the millennium left most people in the world questioning their computers' Y2K compliance. If that wasn't enough, the media heightened our awareness of terrorist plots and national safety and reminded us how much our lives depend on computers.

Although some people simply shrugged off the warnings and continued as normal, others took them seriously and stocked up on bottled water, flashlights, batteries, and franks 'n' beans. I am sure we can all remember exactly what went through our minds during those times. I will always remember exactly where I was during the days leading into the new century—staring at a computer screen wondering how I was going to get all my work finished.

The dawn of the new millennium didn't bring most of the world much of anything; however, it did provide me with some absolutely beautiful O.T. checks.

Ready, Set, Go!

In my opinion, there are two types of news: *expected* news and *unexpected* news. As you probably already figured out, *expected* news is an event like a football game. Unexpected news, on the other hand, is what the news industry thrives on. When something incredible catches the world off guard, they report it and rake in the ratings.

The millennium was a little bit of both though, because the unexpected eerily loomed over Y2K's head. We saw it coming; we all knew it was on December 31, 1999. You would think we would start making the graphics months in advance. Yeah, you would think that, wouldn't you?

The reality of life, work, and the world, however, held much more in store for me. Yes, anyone could see that the big day was getting closer and closer, but there was plenty of other work I needed to finish before I could start creating the graphics for the project. By the time I finished all my work and was ready to start the graphics for the millennium, I had three weeks until the big day.

Right around the time I was getting geared up to create the Millennium animation for MSNBC, NBC News was finishing up their title animation. I needed to see what they had produced before I could start creating the animation for MSNBC, because the two had to appear to be part of the same package.

The Creative Director, Sam Mandragona; the Assistant Creative Director, Joe Dettmore; and I examined what the graphics department for NBC News (New York)

had cooked up for their look (see Figure RW1.1). We needed to incorporate into our animation the logo design that had been created at NBC News.

After looking at the logo, Joe, Sam, and I brainstormed ideas for the animation. What we came up with was, in a nutshell, clocks and globes.

I created more than thirty animations of the earth spinning, illustrating the individual time zones. Each time zone was highlighted with texture maps and volumetric beams. These took a great deal of organization, attention to detail, and time. When I finished the time zone animations, I moved on to creating the open.

Figure RW1.1
The design NBC News used for the Millennium.

Creating the Animation

When it finally came time to concentrate on creating the title animation for MSNBC millennium coverage, I had about a week and a half to complete it. While I was generating visual ideas and blocking out basic objects, Joe Dettmore was in Sound Design with Gordon Miller, creating the score for the animation.

Joe had the very basic principals of the animation in his head. He wanted clocks, globes, and a strong NBC identity. The animation was designed to have particles expanding outwardly, like the universe, during the beginning of the animation. When the animation was complete, the particles would be brought together to form the “Millennium” type, bringing the whole concept together as well.

Joe and I decided that the animation should be broken up into four sections. Those four sections are described below. You can view realwld1\millennium.avi to see the completed animation.

Shot 1: The Clocks

The establishing shot of the animation contains three different colored clocks with rapidly changing faces (see Figure RW1.2). The purpose of this shot is to engage the viewers by introducing them to the time and space theme, which will play throughout the animation. This section concludes with a veil of particles.

Figure RW1.2
A frame of the clocks from the final animation.

This shot was the simplest shot for me, personally, to complete. Although it appears first, it was the third shot (of the four) that I completed for this animation. Joe completed most of the pre-production. Anna Kostyrko, a staff designer, captured the clock face images into the Quantel Paintbox Express (a proprietary video image processing tool). Joe loaded the still clock face images from the Paintbox into the Quantel Hal Express (a proprietary video compositing tool), color corrected them, and assembled the images into an animated sequence.

Joe then manipulated the resulting clock face animation to create three separate clock face animations: one red, one blue, and one gold. These animations were recorded to my DDR (Digital Disk Recorder) and were imported onto my hard drive as individual Targa files.

Once the three colored clock face images sequences were on my hard drive, I began to build some test scenes to illustrate some of the different ways the rendered output could appear. The first sample I created, realwld1\jclck01.avi (see Figure RW1.3), has all three clocks self-intersecting, which created a thick, layered and almost chaotic appearance.

The second sample, realwld1\jclck02.avi (shown in Figure RW1.4) shows the three clocks layered and parallel to each other. When they were fully rendered, I called Sam and Joe to examine these thumbnails and offer their creative criticism. We agreed that the first one was a little too confusing for an establishing shot, so we decided we should use something closer to the second one.

Figure RW1.3
The first test I created for the first shot, jclck01.avi.

Figure RW1.4
The second clock test I created, jclck02.avi.

Someone offered up the suggestion to put glass over the clock faces to give them more punch. The glass over the clock faces would not only create extra highlights and dimension, but also refract the clock faces beneath them, adding more depth.

In the next few sections, I quickly step you through how the clocks were created. To fully understand the process, you will want to load **realwld1\scenes\clock01.max** from the accompanying CD (see Figure RW1.5). Four objects are visible in the scene: the circular framework of the clock (Clock-In01 and Clock-Out01), the glass lens (Clock-Glass01), and the billboard for the clock face images (Clock-Map01).

You will notice four objects in the scene: a square, two tube primitives, and a squashed hemisphere. We will concentrate our attention on how to create the clock face map and the refractive clock lens. To do so, we will examine each object individually.

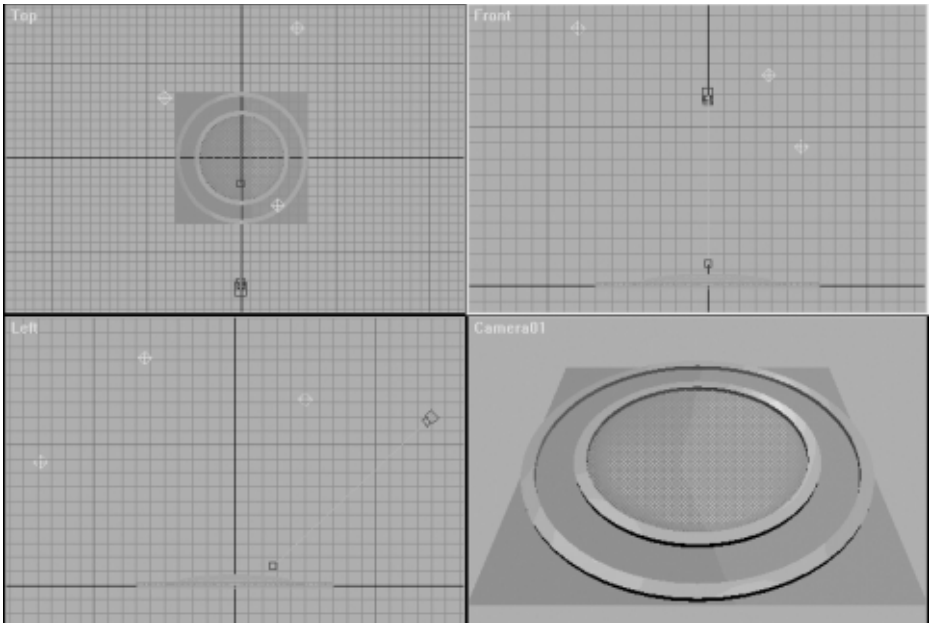

Figure RW1.5
Clock01.max.

The Clock-Map01 Object

This object is the billboard in which the clock face texture map was applied. For this example, I substituted the clock face map with a checkerboard texture (see Figures RW1.6 and RW1.7).

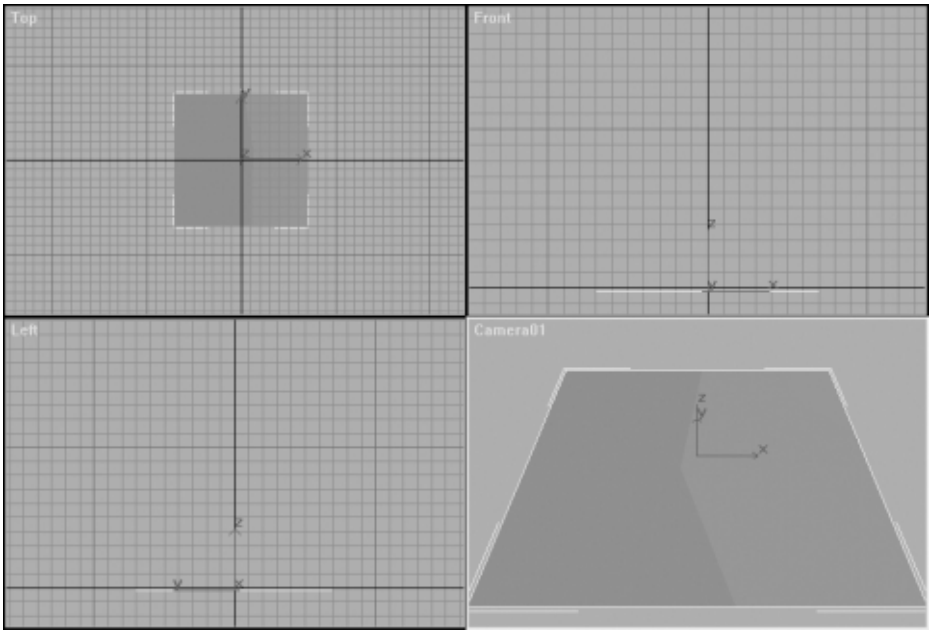

Figure RW1.6
The Clock-Map01 object in all four views.

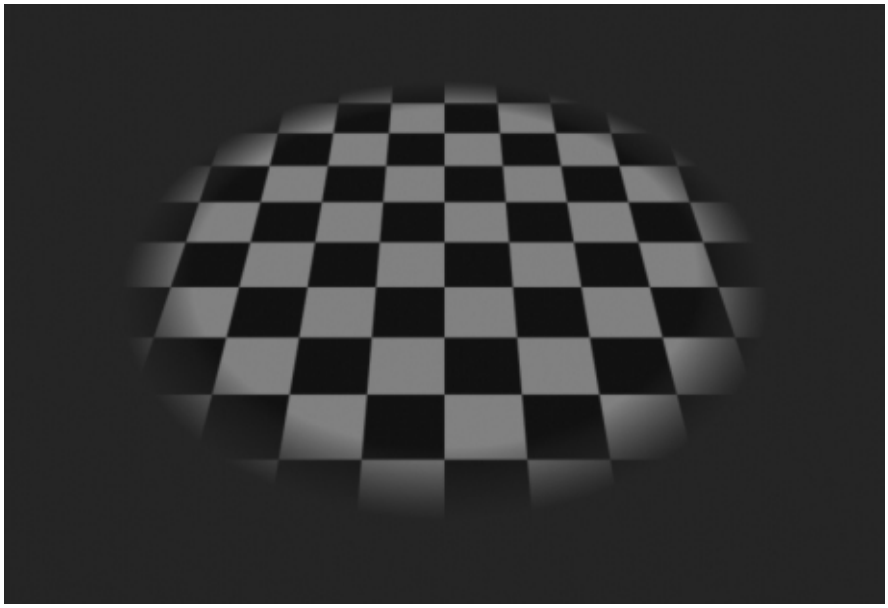

Figure RW1.7
The Clock-Map01 object rendered.

If you examine the Clock01.max file, you will notice that the Clock-Map01 object is simply a square shape with a Mesh Select and UVW Map modifier applied. How, then, does this rectangle render as a circle? The answer to this question is easily discovered in the Material Editor (see Figure RW1.8).

The Clock-Map01 object's material has a Gradient Ramp map in its Opacity slot. The Gradient Type is set to Radial, which creates the circular gradient that is visible in the material preview slot. Because of this radial gradient, the square Clock-Map01 object renders as a soft circle.

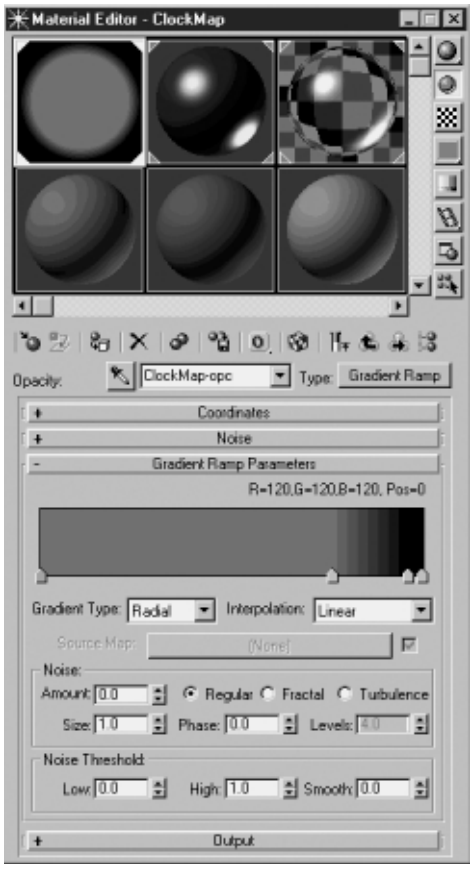

Figure RW1.8
The Material Editor displaying Clock-Map01's opacity map.

The Clock-Glass01 Object

This object, as you recall, is the clear glass lens that rests over the clock face. Its primary purpose in the scene is to catch highlights and refract the objects below it (see Figures RW1.9 and RW1.10).

The Clock-Glass01 object is a Sphere primitive with a Hemisphere setting of .5. The Hemisphere setting chopped the sphere precisely in half, and an XForm modifier was applied and scaled to flatten it.

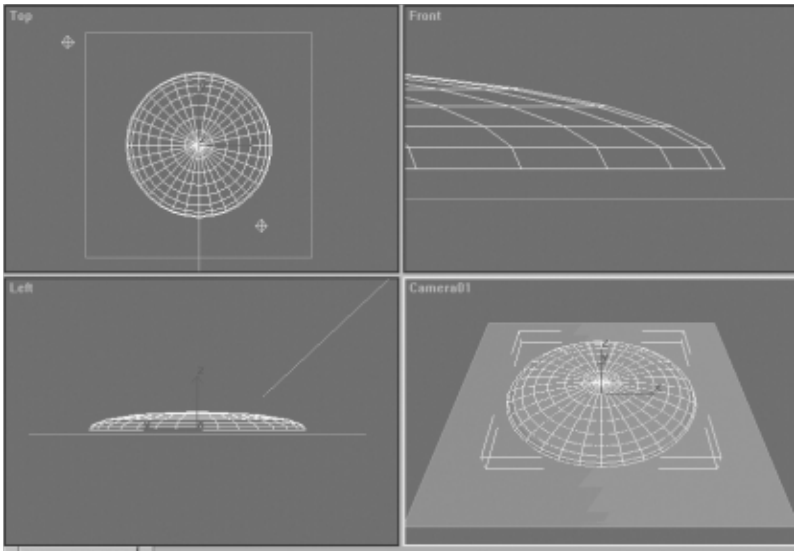

Figure RW1.9
The Clock-Glass01 object resting above the Clock-Map01 object.

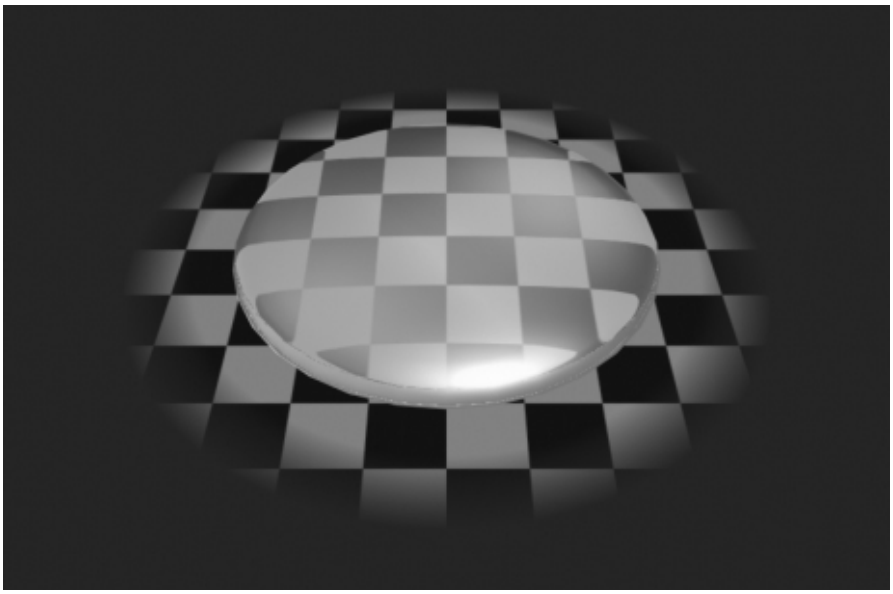

Figure RW1.10
The rendered scene with both the Clock-Glass01 and the Clock-Map01 object.

A Raytrace Refraction map was applied to the Clock-Glass01 object in the Material Editor. To create a more dramatic refraction, I also increased the Index of Refraction amount to 1.7 in the Extended Parameters rollout of the material.

The Clock-In01 object was intended to appear as though it were supporting the Clock-Glass01 object (see Figure RW1.11). This makes the clock seem to be a more solid and realistic fixture. In Figure RW1.12, you can see two of these clocks overlapping one another and how the lower clock is refracted in the higher clock. In Clock01.max, both clocks are included in the file; however, you need to unhide the second one.

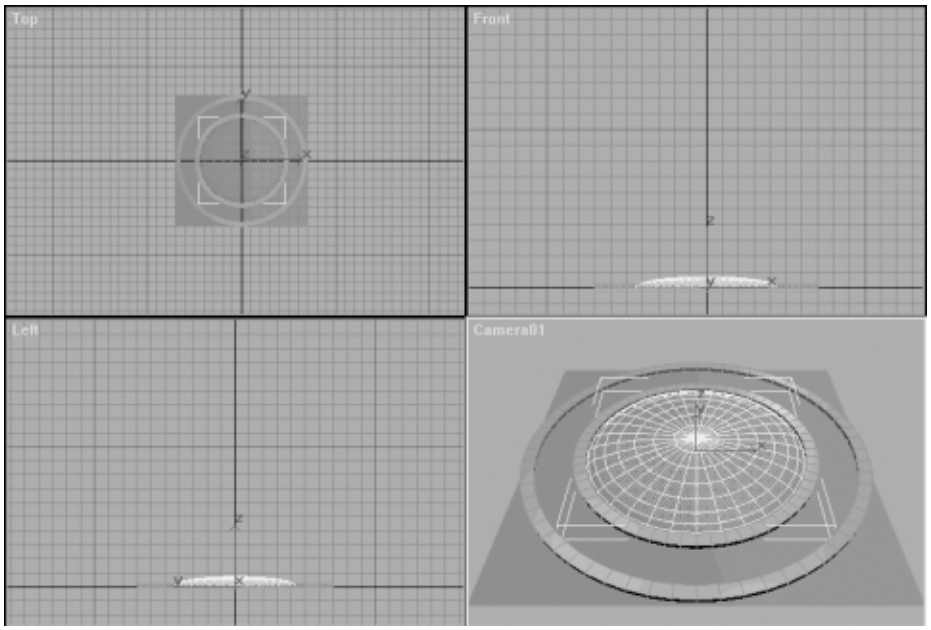

Figure RW1.11
All four objects of the clock.

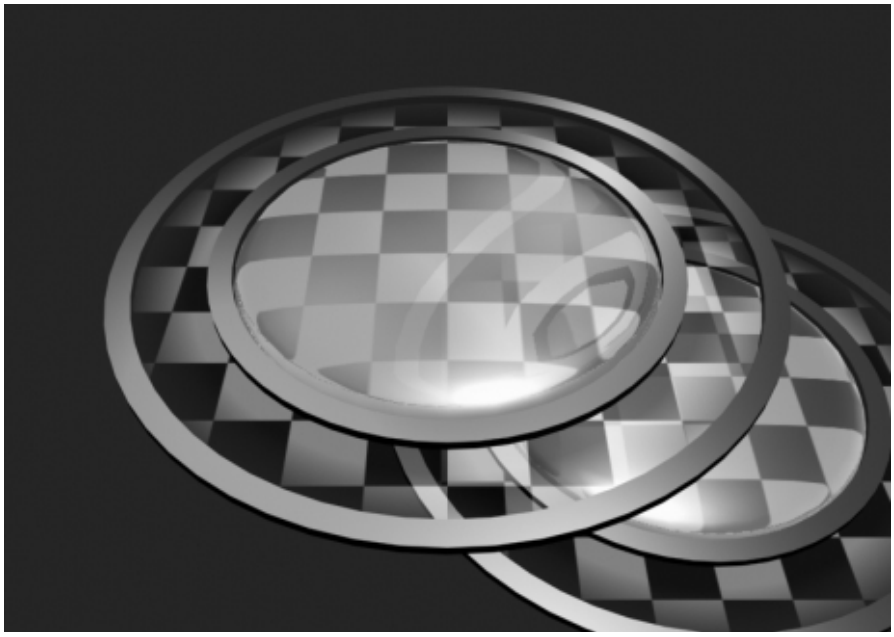

Figure RW1.12
Two overlapping clock objects rendered to illustrate refraction.

These clocks perfectly demonstrate how a little ingenuity can build a simple scene with dramatic results. As mentioned above, the clock scene was the easiest of the scenes I created. Even though it was easy to complete, however, the actual rendered look is sophisticated. This animation (Shot 1) was created, rendered, and approved with no re-renders, all in one day.

Shot 2: The NBC Peacock

The shot of the NBC peacock inside the globe (shown in Figure RW1.13) is probably my favorite of the four shots in the animation. Although it wasn't the first section I created, it was the one that ultimately excited me about working on this project. This shot was actually the first shot completed and approved. It set the pace for the rest of the scenes.

Joe and I started by discussing ideas for new things we could do with the NBC peacock. During our discussion, I remembered that I had always wanted to build on the volumetric peacock I had created for CNBC's *Upfront Tonight*. I told Joe that I had an idea, and I asked him to give me a few hours to put something together.

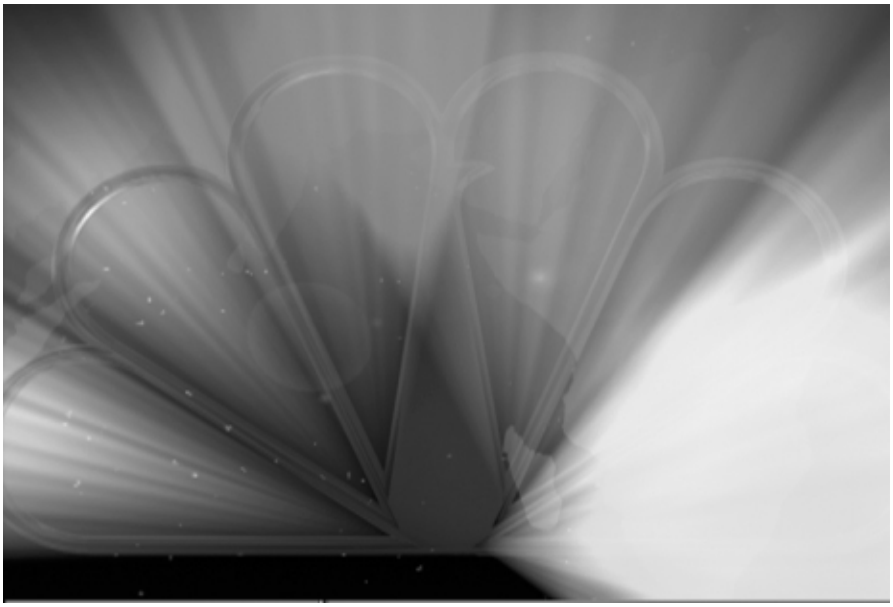

Figure RW1.13
A frame from the NBC peacock scene of the Millennium animation.

I wanted to make smoke rings that traveled along the length of the volumetric beams of the peacock as they swept into position. The file realwld1\peakbeam.avi (shown in Figure RW1.14) shows my first complete test rendering of the volumetric peacock with smoke rings. When it finished rendering, I called Sam and Joe in to take a look at it so I could get their input. Thankfully, they loved it as much as I did. So I went to work creating the completed shot.

First, I created the volumetric light beams that would ultimately become the feathers of the NBC peacock. To make the colorful streaks of light in each beam, I applied a Gradient Ramp map in each light's Projector slot. You will examine that process shortly, when you look at how the smoke beams were created.

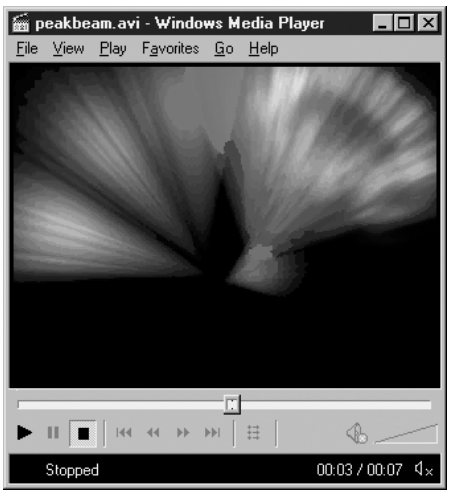

Figure RW1.14
My first test of the volumetric light peacock.

When the light beams were created in position and a test had been rendered, I made each light a child to its own personal Dummy helper. The rotation of the Dummy helper is what causes the beams to sweep through the scene. When I was happy with the way the scene was animated, I created clone of all the spotlights to use as the smoke ring emitters.

In the next few sections, I quickly step you through how the smoke rings were created. To fully understand the process, you will want to load **realwld1\scenes\beam01.max** from the included CD (Figure RW1.15). The contents of the scene are simply a target spot light and a target camera.

Volumetric lights are commonly used in 3D animations because of their simplicity. Used correctly, volume lights add subtle accents that heighten the overall aesthetics of an image. However, in some cases, a bold, bright volume light adds the brazen punch the animation needs.

The controls 3ds max provides make it easy to create animated volume lights. Going into this animation, I decided to build on a simple technique that was already in my arsenal: animating the length (attenuation) of a volume light. The principle behind this effect is to animate the Far Attenuation of the light, making the beam of light appear to grow.

The Cross-Section

Load **realwld1\scenes\beam01.max** from the included CD (see Figure RW1.15). The contents of the scene are simply a target spotlight and a target camera.

The first step in creating the smoke ring effect was to animate the Attenuation of the light. As I mentioned previously, animating the Far Attenuation of the spotlight

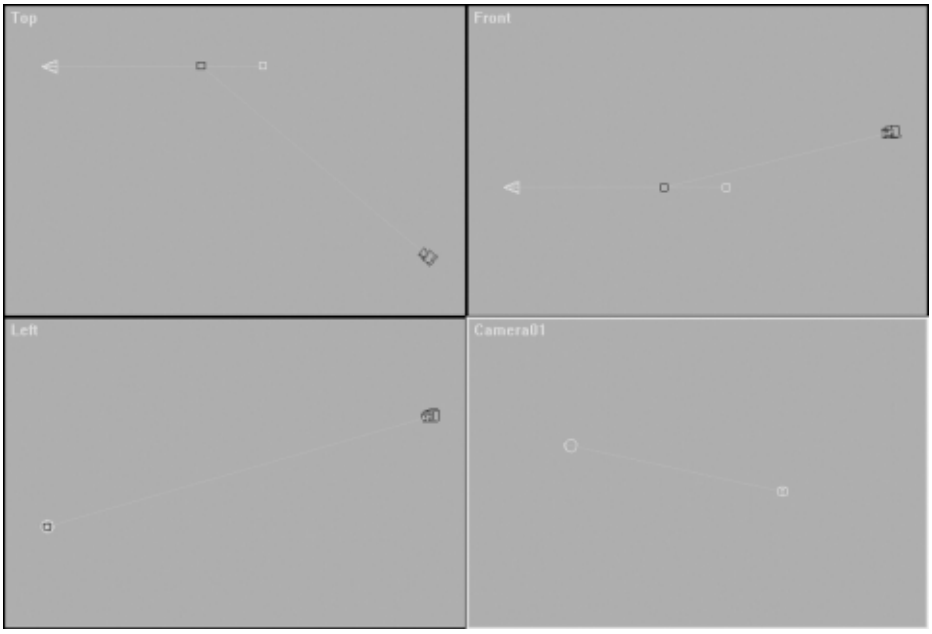

Figure RW1.15
beam01.max.

animates the length of the beam (or where the beam ends). To make the light appear to be blowing smoke rings, the Near Attenuation of the light must also be animated in sync with the Far Attenuation. This will create a thin cross-section of light emanating from the light. If you were to select the Spot01 object in the Beam01.max scene and play the animation, you would notice that the Near Attenuation and Far Attenuation are slightly apart but move together (see Figures RW1.16 and RW1.17).

This animated cross-section creates the motion of the smoke ring the volume light will create.

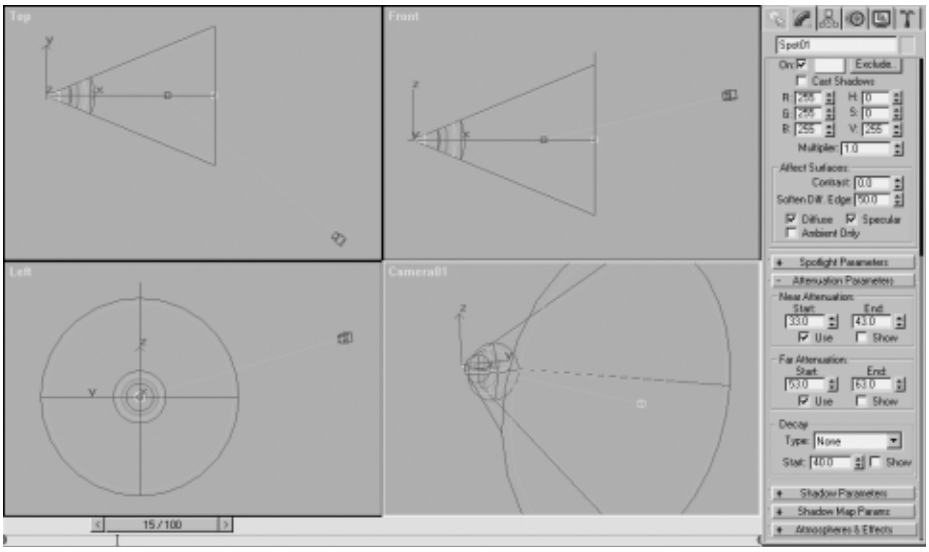

Figure RW1.16
At frame 15, the Near Attenuation and Far Attenuation are near the source of light.

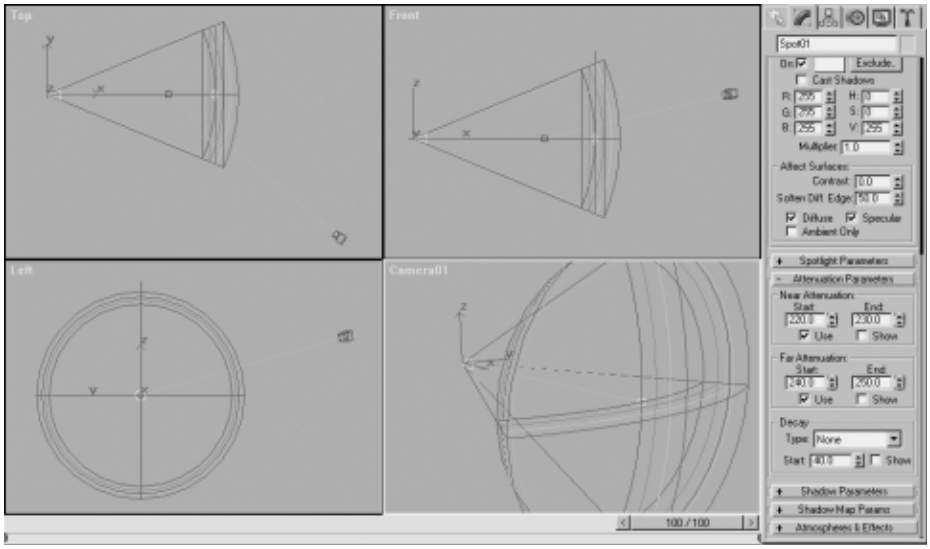

Figure RW1.17
At frame 100, the Near Attenuation and Far Attenuation are animated further away from the light source.

The Ring of Light

This effect is intended to look like a smoke ring, except it uses light instead of smoke. To that end, a special map had to be created in the Material Editor and used as the light's Projector Map (see Figure RW1.18).

The Projector map is simply a Gradient Ramp procedural map. Its type is set to Radial, and the start and end colors are set to black. Also, a touch of Noise is added to the gradient to add a more organic look. This Gradient Ramp is projected through the beam of light. The color black will not emit any light. Therefore, only the green circle will appear in the rendering when Volume Fog is activated on the light (see Figures RW1.19 and RW1.20).

To add a little more punch to the effect, I animated the phase of the Noise on the Radial Gradient Ramp. This created an undulating smoke/light effect that's visible in the rendered animation, beam01.avi. When applied to the growing beams of light that formed the peacock, this added the necessary punch to make the effect new and fresh.

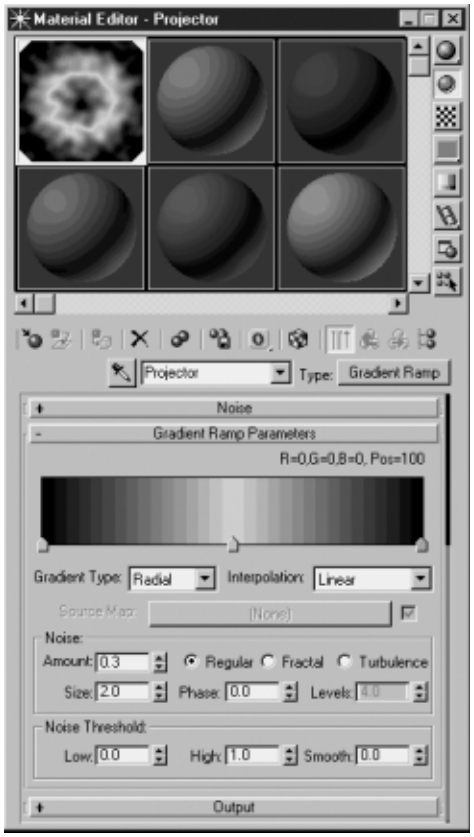

Figure RW1.18
The Material Editor with the spotlight's Projector Map active.

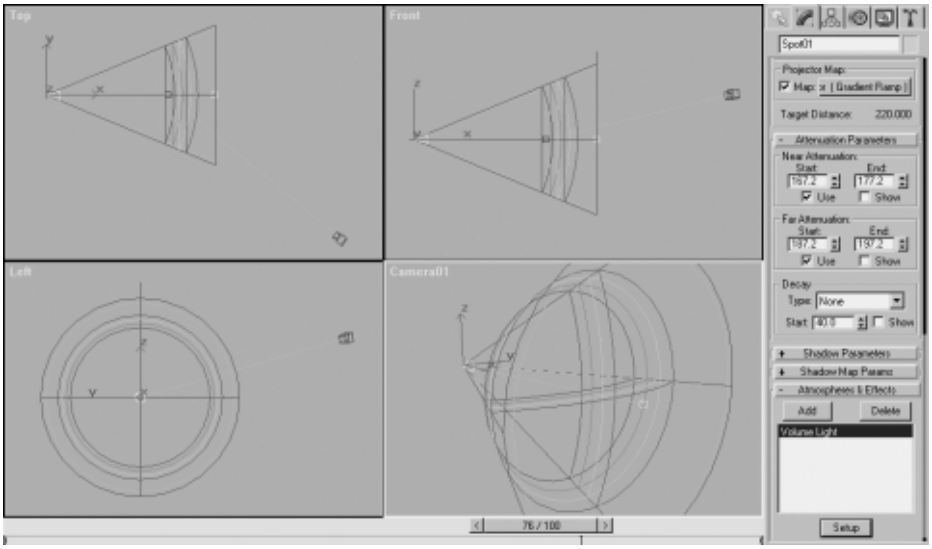

Figure RW1.19
The scene at frame 76.

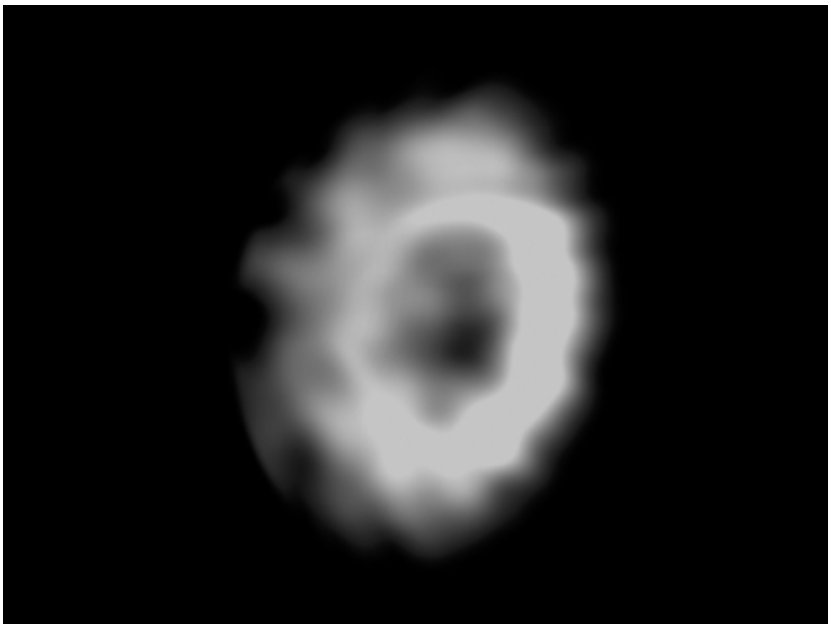

Figure RW1.20
The rendered smoke ring effect.

The Peacock Feathers

I created the six feathers of the NBC peacock with twelve volume lights. Six of the volume lights grew from the center and created the solid beams; the other six were the "smoke ring" volume lights you just learned about. I framed this volumetric peacock with a rounded framework of the peacock (see Figure RW1.21).

The peacock was placed inside a model of the earth's continents. The camera was animated to orbit from right to left through the inside of the globe (see Figure RW1.22).

Figure RW1.21
A frame from the final animation from the right side of the image clearly shows the rounded framework of the peacock.

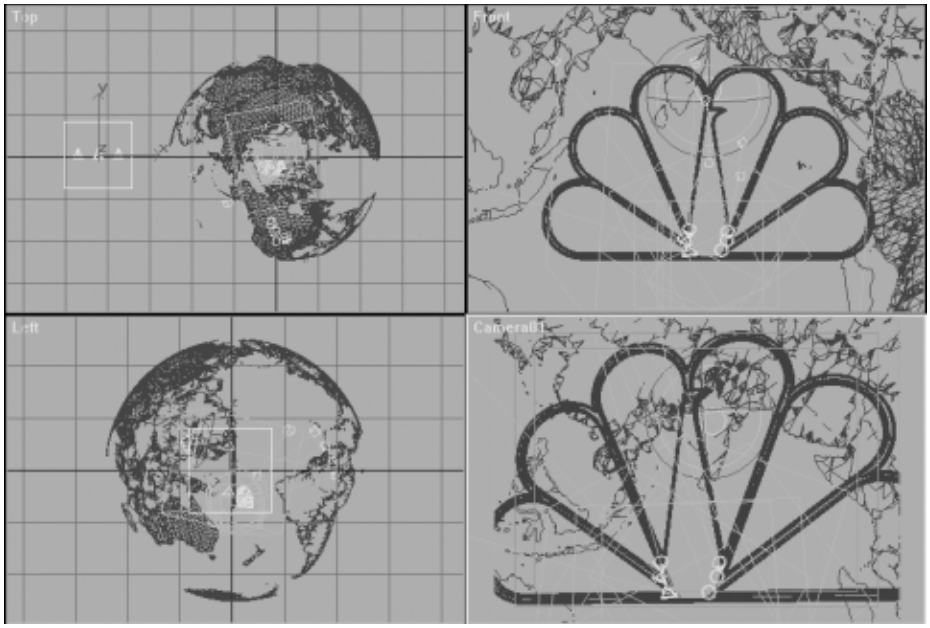

Figure RW1.22
The four views of the rendered frame shown in Figure RW1.20.

One final volume light was placed in the rear of the scene to backlight the peacock as the shot reaches the end. This volume light helps transition this shot to the next shot, which shows the exterior of the globe with the clocks surrounding it.

The Peacock Particle Effect

As the peacock resolves, particles emit from the framework of the peacock. A Particle Array with a copy of the peacock shape as the Object-Based Emitter created this effect. Since the Particle Array cannot use shapes as an Object-Based Emitter, I

simply applied a Mesh Select Modifier to the shape, which turns the shape into a mesh. If you load realwld01/scenes/peakpart.max, you will see the elements used for the particle effects from the original scene (shown in Figure RW1.23).

You will also notice a Motor Space Warp in the very center of the peacock. This Space Warp spins the particles around the peacock shortly after they are emitted (see Figure RW1.24). Otherwise, the particles would travel in a straight line and would lack dramatic impact.

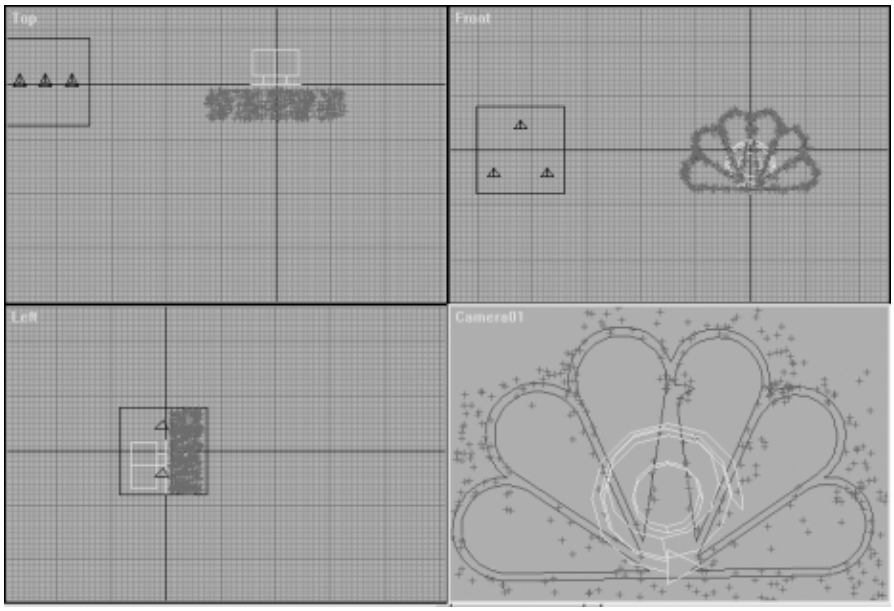

Figure RW1.23
Frame 90 from peakpart.max.

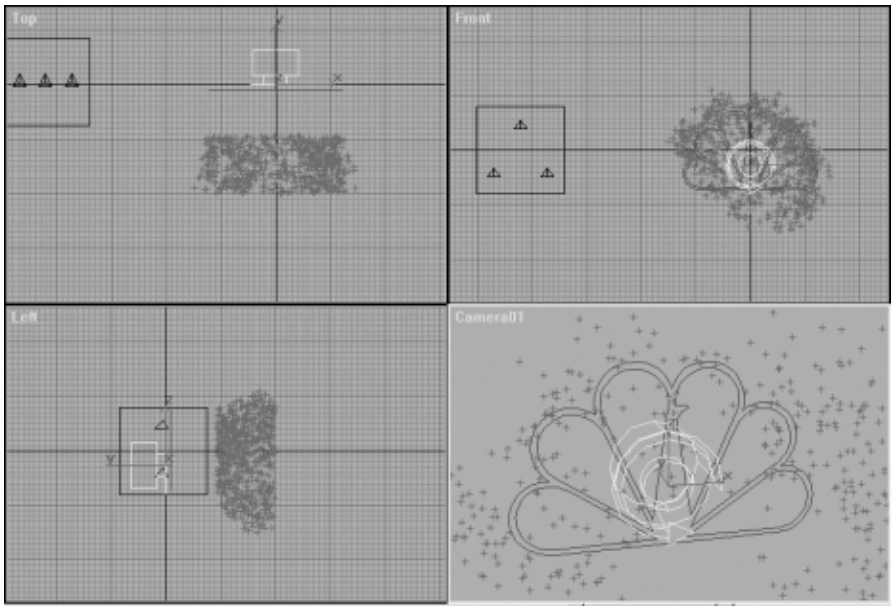

Figure RW1.24
Frame 117 from peakpart.max.

This completes the process for creating the second shot. The only other thing I should mention is that the stars in the background were added by using a bitmap of stars on a spherical environment background.

Shot 3: The Globe and the Clock

The third shot in this animation marks the first time you see the globe exterior and the clock apparatus surrounding it (see Figure RW1.25). A great deal of time was put into designing and creating the finished clock object. Figures RW1.26 through RW1.28 illustrate the evolution of the clock design throughout the creative process.

Figure RW1.25
An image from Shot 3 of the final animation.

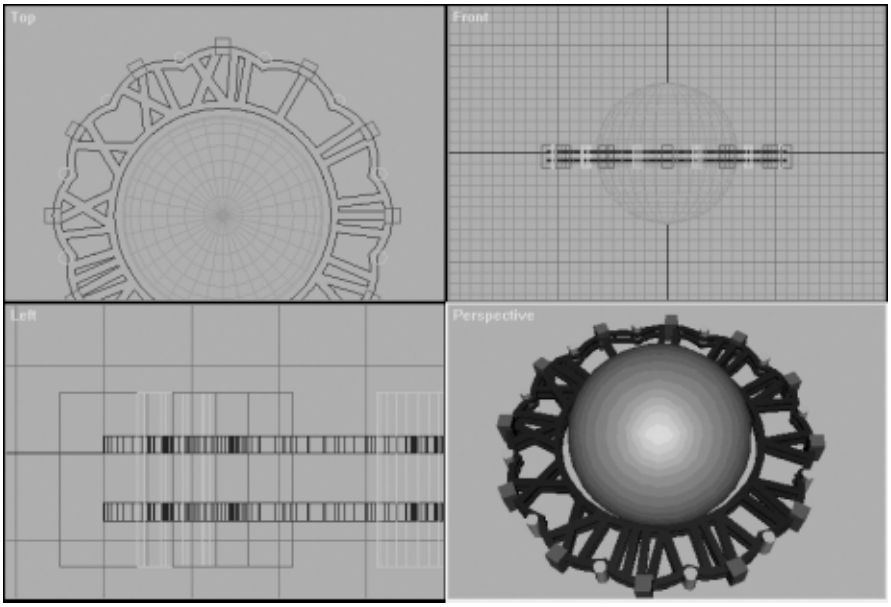

Figure RW1.26
One of the very first basic designs for a clock created for the Millennium project. Notice how this clock makes the earth (sphere) to be more of a toy than the real earth.

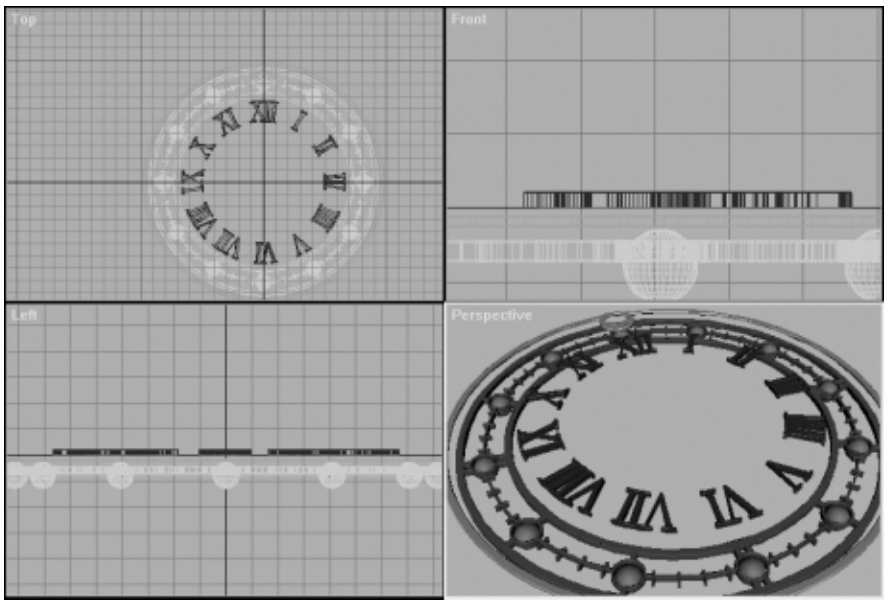

Figure RW1.27
A more refined and polished version of the clock. However, it was not used because it was too visually complicated.

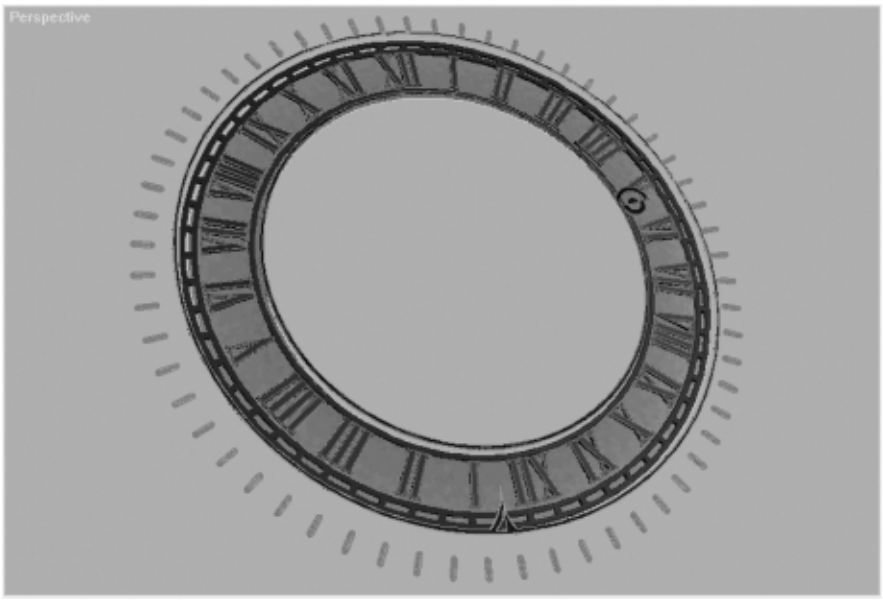

Figure RW1.28
The clock used in the final animation.

The Clock Face

Joe Dettmore and I agreed that we should create a clock with twenty-four hours on it. In the final design, the clock has the Roman numerals for one through twelve repeated on its face twice. After we decided on the design for the clock, I handed it off to Jonathan Burleson to create the spline of the clock face. Along with being a unique clock face, this clock appealed to me because of how huge it appears to be. By this I mean that when it wraps around the earth, the earth makes the clock look huge (see Figure RW1.29)—as opposed to the clock making the earth look like a toy.

When Jonathan finished his work on the clock face shape, I loaded it into 3ds max, beveled it, and added the materials. Because the clock was going to have a globe in the center, we needed to decide how the hands were going to be created. We certainly didn't want the hands of the clock to project from the center and extend through the earth's surface. To get around this problem, I created circular clock hands that surrounded the earth object (shown in Figure RW1.30).

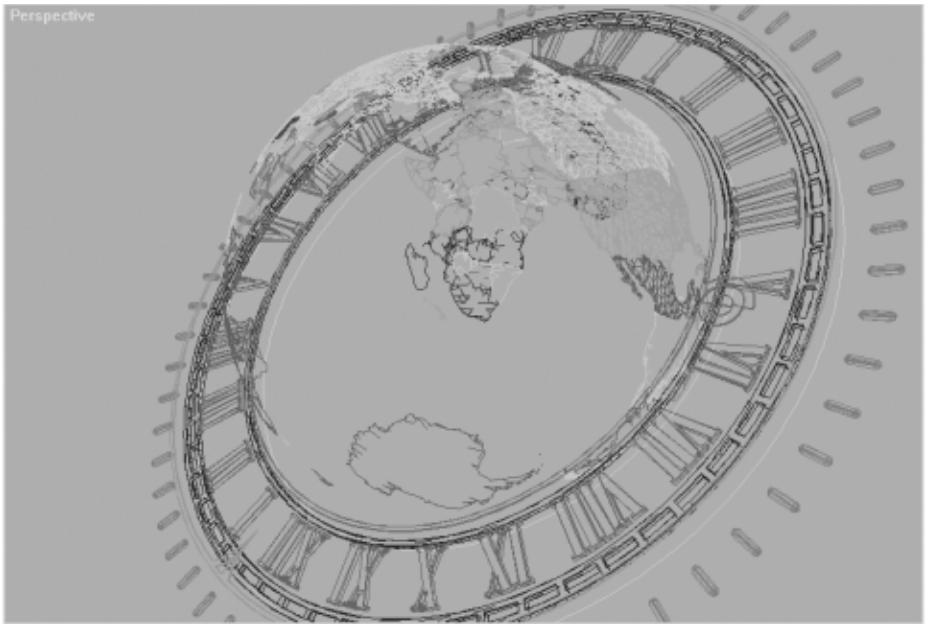

Figure RW1.29
The clock looks natural wrapping around the earth.

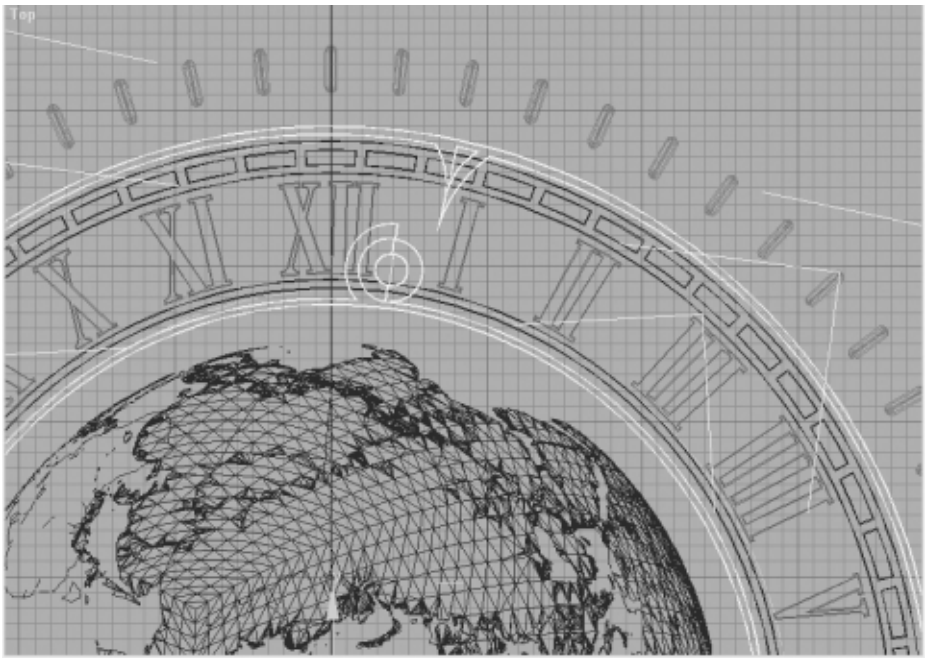

Figure RW1.30
A close-up wireframe detail of the hands of the Millennium clock.

The model of the globe was purchased from a popular 3D stock object company. The globe was then imported and transformed to occupy its designated place within the clock.

The Globe's Volumetric Beams

A Free Spot light, with a falloff of 85 degrees, created the volumetric light beams that emanate from the center of the globe. The Free Spot light was assigned a Look At Motion Controller with the Camera designated as its Target. The Look At controller kept the Free Spot light pointed directly at the camera, keeping the effect uniformly round no matter where the camera moved. I used a Free Spot instead of an Omni light because the Omni threw too many beams (in all directions). The Free Spot creates the illusion that light is shooting 360 degrees, but it is not so overwhelming. This is clearly illustrated in the example file realwld1\scenes\vollight.max on the CD (shown in Figure RW1.31). Figure RW1.32 shows a rendered frame from this scene. Both lights use the same attenuation and volume light settings; however, because the Free Spot (right) emits an 85-degree cone of light, its effect is subtler.

The Camera

With the geometry and effects of the scene created, I added a camera and animated the scene. The camera was very close to the clock object in the beginning of the animation and considerably further away at the end. To animate the camera's position smoothly, I roughly animated it until I was happy with where the camera was located at each position key during the animation.

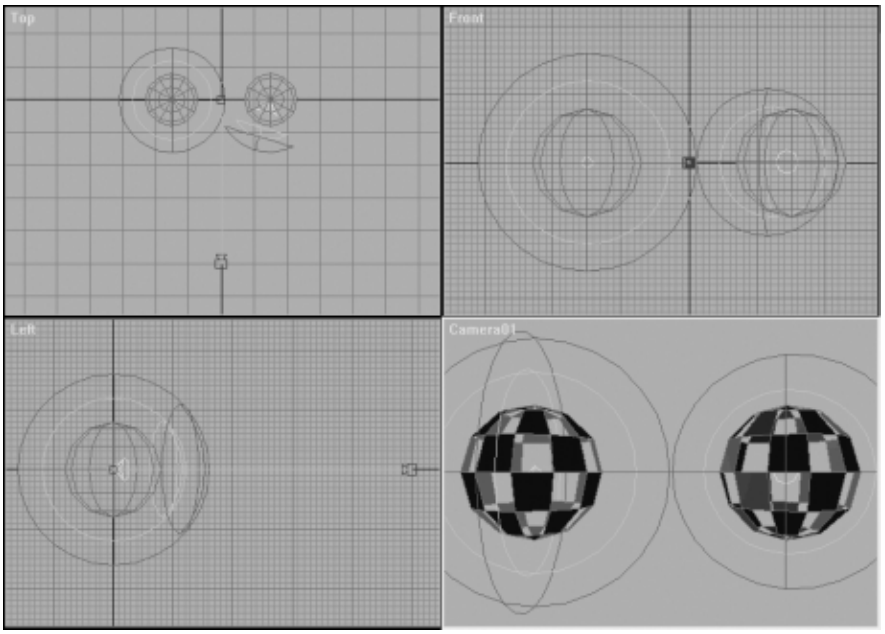

Figure RW1.31 Vollight.max illustrates the difference between using an Omni light and a Free Spot light to generate the volume light effect.

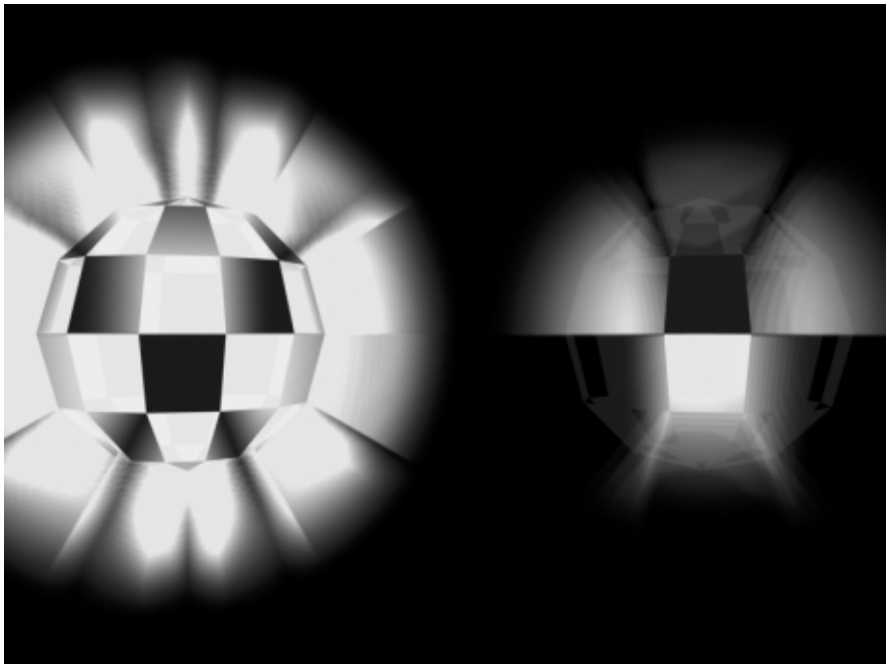

Figure RW1.32
A rendered frame from vollight.max.

Because of the Bézier interpolation of the keys, the camera moved undesirably. To fix it, I entered the Motion panel, went to the Trajectories rollout, and clicked Convert To in the Spline Conversion group. This converted the camera's trajectory into an editable spline. A Path controller was then assigned to the camera, and the converted trajectory shape was assigned as the path. I then used the Bézier handles to smooth out the shape of the path to desirably animate the position of the camera.

Shot 4: The Millennium Logo

Figure RW1.33 shows the final shot I put together for the animation, and if I remember correctly, I had less than 24 hours to complete it. However, I had a reasonably clear idea of what I needed to do before I started animating. Because most of the background (the clock and globe) was already done, all I really needed to do was build the text, and then I was ready to start animating.

Joe and I had discussed this shot from the very beginning of production. We knew the general effects we wanted to see, such as the particles traveling backwards to create the Millennium type. Just to make sure Joe and I were on the same base, Joe quickly drew up storyboards on sticky notes; those storyboards are shown in Figures RW1.34 through RW1.37.

Figure RW1.33
A frame from the fourth shot of the Millennium animation.

Figure RW1.34
Frame One of the sticky note storyboard.

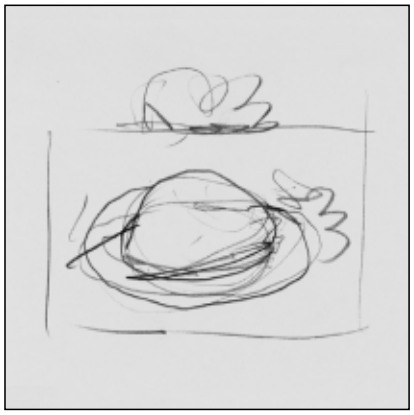

Figure RW1.35
Frame Two.

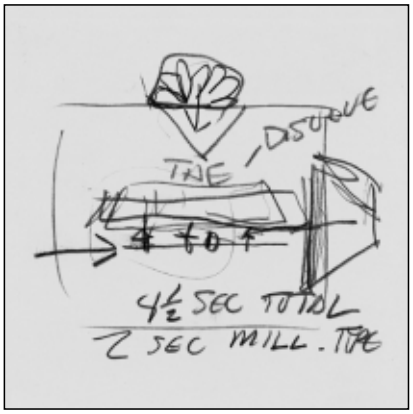

Figure RW1.36
Frame Three.

Figure RW1.37
Frame Four.

Frame One (Figure RW1.34) shows the camera looking straight down on the globe and surrounding clock. Frame Two of the storyboard (Figure RW1.35) illustrates the desired angle of clock/globe relationship. Notice the NBC peacock out of the frame above. Frame Three (Figure RW1.36) demonstrates the desired animation of the logo's elements. The trapezoid to the right is the Millennium type, and an arrow indicates its rotation into place. The arrow on the left specifies that the MSNBC type is to write on from the left. And once again the peacock is shown flying in from the top of the frame. Frame Four (Figure RW1.37) depicts all the elements in their final positions, completing the animation.

Although primitive, a storyboard such as the one above is an easy way to verify that all the minds working on a project are on the same track. In an ideal world, I would certainly have preferred to work with a beautifully illustrated storyboard. However, time usually doesn't afford us that luxury.

Building the Logo

Because I was able to recycle the clock and globe element from shot to shot, creating the background was simple. All I really had to do was animate the camera. When the motion of the globe and clock element was satisfactory, I sent it off to the render farm to render away.

Joe was compositing most of my elements in the Hal, so it was most convenient for both of us for me to create the logo elements as separate animations. This is because it is much easier to color-correct elements and offset their animation if they are all separate layers in the composite. Although the creation of these elements was fairly straightforward, I recall two things standing out.

When we were creating this shot, Joe and I were obsessed with two elements. The first was that we wanted to do something we had never done before with the MSNBC type, and the second related to the Millennium text particles. In the following sections, you will examine how each scene was created.

The MSNBC Type

View the file realwld1\msnbc.avi and the corresponding Max file realwld1\scenes\mlmsnbc.max. The MSNBC type rotates onto the screen, letter by letter, in a flurry of fairy dust and lens flares (see Figure RW1.38). This scene could be broken down into four elements: the MSNBC objects, the particles, the MSNBC outline objects, and the lens flares. Even though the action passes very quickly, a lot happens.

Figure RW1.38
The MSNBC type element.

First, I animated the rotation of the MSNBC letters individually and experimented with their timing until I was satisfied. When their timing was correct, I animated their Visibility track to make each one appear as its rotation begins.

I created copies of each MSNBC letter shape and activated the Renderable check box in the General rollout. This allowed me to create the outlines of the MSNBC letters that emanate after they finish rotating into place. The Visibility tracks of the MSNBC outline objects were animated to make them appear and disappear.

One thing about the Visibility tracks in this scene is particularly noteworthy. For the MSNBC and the MSNBC outline objects, different animation Controllers are assigned to the tracks (see Figure RW1.39). The MSNBC (solid) objects have a simple On/Off controller, indicated by the blue line, which provides a simple on or off control. However, the MSNBC outline objects have a Linear Float controller that allows for the effect of being dissolved on and off.

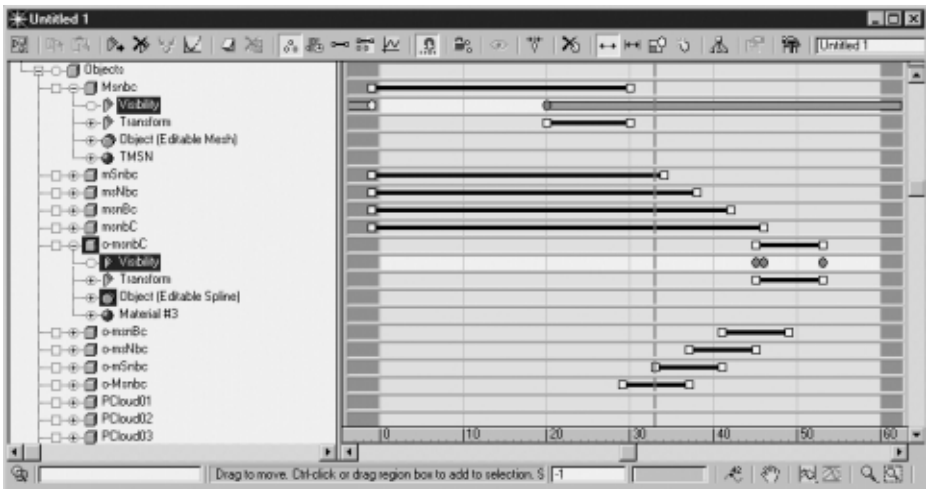

Figure RW1.39
The Track View with two different Visibility tracks expanded.

The fairy dust effect is created with multiple Particle Cloud emitters, each of which generates particles for only seven frames. The lens flares are added in Video Post; you can see their settings by accessing their individual dialogs.

The Millennium Particles

Joe had approached me early during this project and asked "Can we make particles go backward?" I thought to myself, "Even if they were going backward, they would have to be traveling forward." I answered, "Yes." Confused? I was too. Luckily it wasn't as hard as it seemed at first. Joe simply wanted the screen to be filled with random particles that were suddenly sucked back in space to spell the word "Millennium."

The easiest way to create the effect was to create the particles traveling forward and have Joe reverse the animation in the Hal. You can view realwld1\milparts.avi to see the particle animation I sent to Joe to reverse (see Figure RW1.40). Load realwld1\ scenes\millprts.max as well to see the file that created this animation.

If you look at the realwld1\scenes\millprts.max scene, you may be overwhelmed by all the Space Warps that make up the scene (see Figure RW1.41). When it's broken down, it becomes quite simple.

The particles are emitted from a Particle Array particle system using the Millennium type as an Object-Based Emitter. The first Gravity Space Warp uses Spherical Force and pulls the particles together from frames 150–220, basically initiating the random motion of the particles. The second Gravity Space Warp acts as gravity as we

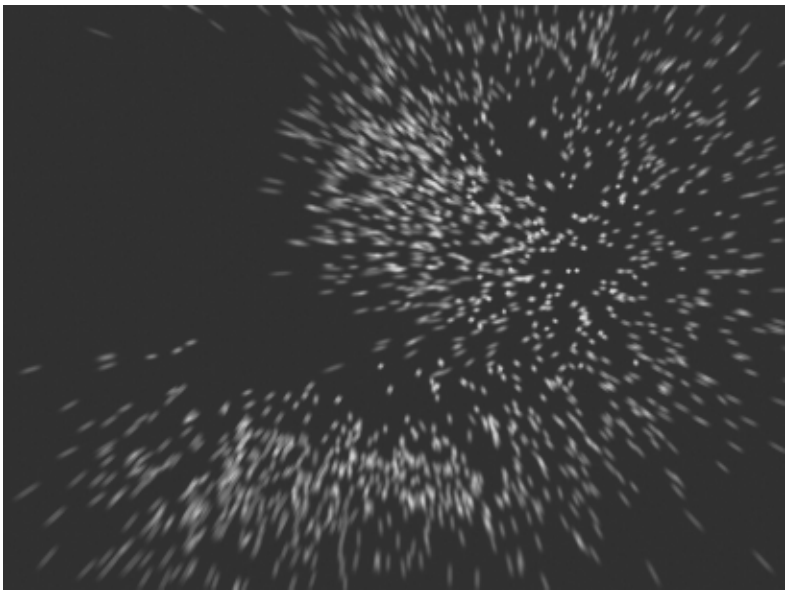

Figure RW1.40
The Millennium particles.

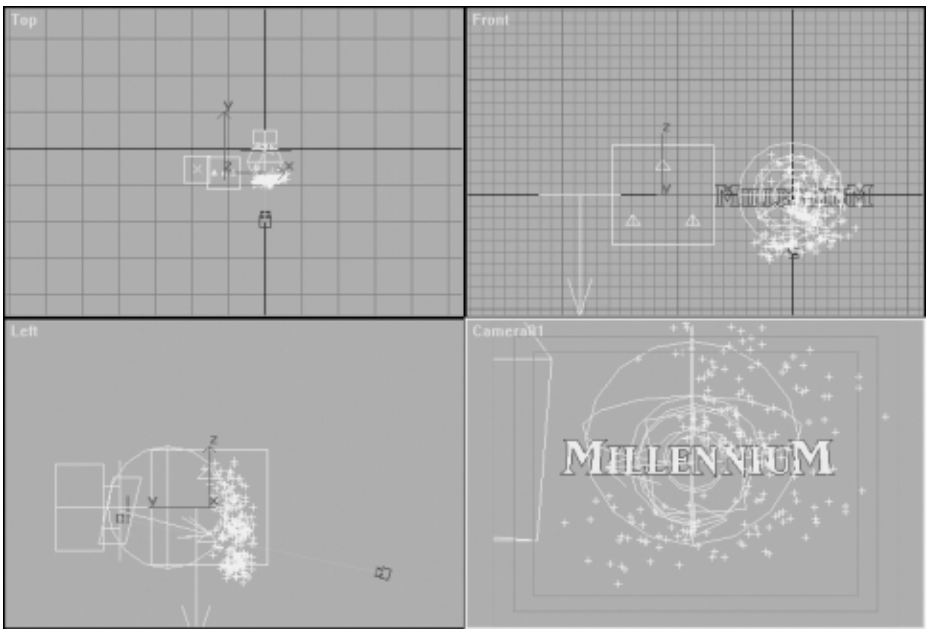

Figure RW1.41
Millprts.max.

earthlings know it: It softly pulls the particles downward. The Wind Space Warp blows the particles toward the camera, starting at frame 200, and the Motor Space Warp gives the particles a nice twist, also starting at frame 200.

To give the appearance that the particles are streaks, I used two different types of Motion Blur on them. I used Object Motion Blur with a Duration of 1 frame, 16 Samples, and 16 Duration Subdivisions. The second motion blur I used is available only in Video Post; it's called Scene Motion Blur, and it's shown in Figure RW1.42.

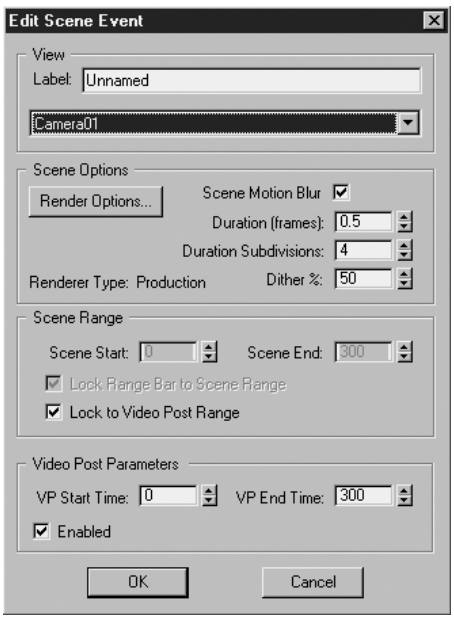

Figure RW1.42
The Edit Scene Event dialog with Scene Motion Blur activated.

Scene Motion Blur renders each frame multiple times, as indicated in the Duration Subdivisions field, and then it dithers all the renderings for the frame together. So the combination of the Object and Scene Motion Blur created a very nice streaking effect.

Rendering the Final Composite

Joe color-corrected and composited the individual layers I had created and rendered. When each individual shot was finished, Joe created all the transitions from shot to shot. The final piece is right on the money—exactly what Joe and I had anticipated. Everyone was happy with the final product, and no changes were required, which was good because it was finished only hours before it was scheduled to air.